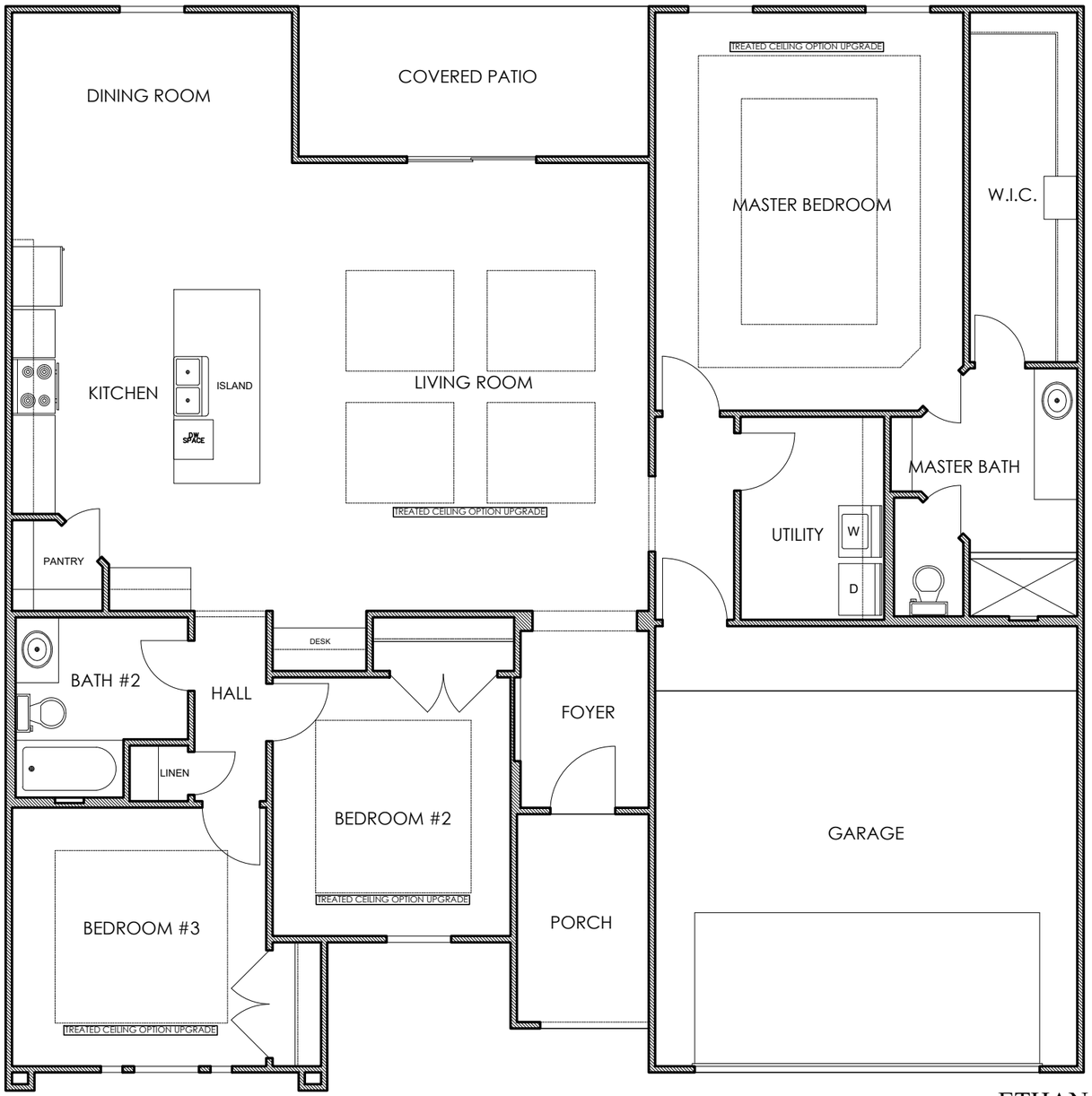

ETHAN

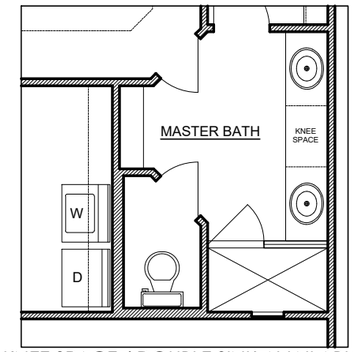

KNEE SPACE / DOUBLE SINK AVAILABLE
ONLY WITH L2 SHOWER OPTION

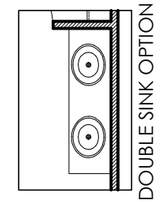

DOUBLE SINK OPTION

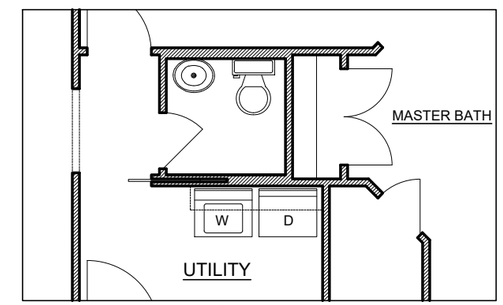

½ BATH OPTION

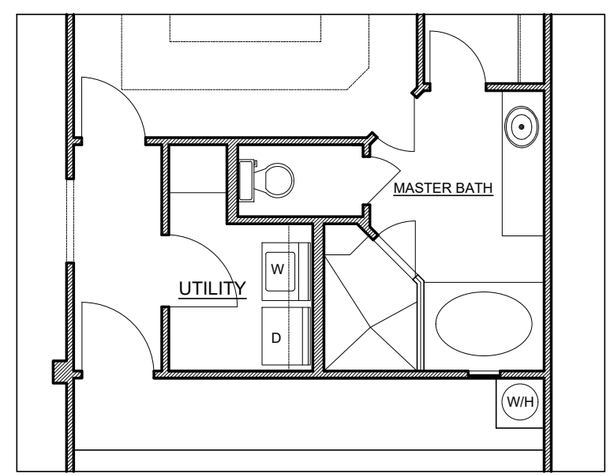

GARDEN TUB & SHOWER OPTION

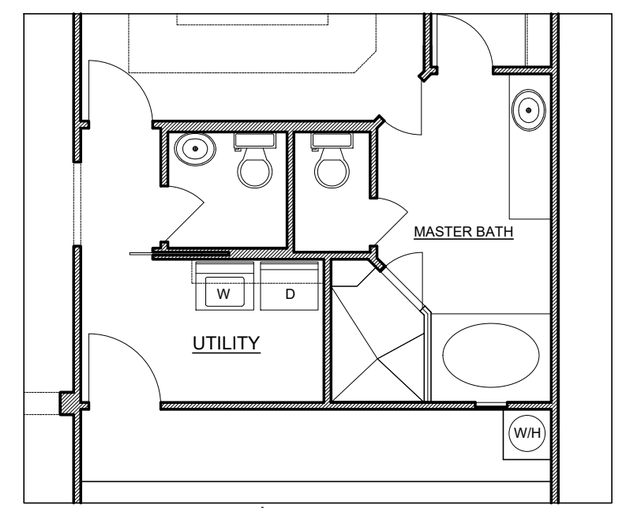

½ BATH OPTION
GARDEN TUB & SHOWER OPTION